MOEN®

Illustrated Parts

Conway™
Single-Handle Tub/Shower

MODEL	TYPE	FINISH
82922	Lever	Chrome
82922SRN	Lever	Spot Resist Brushed Nickel
82922BRB	Lever	Mediterranean Bronze

■ **Order by Part Number**

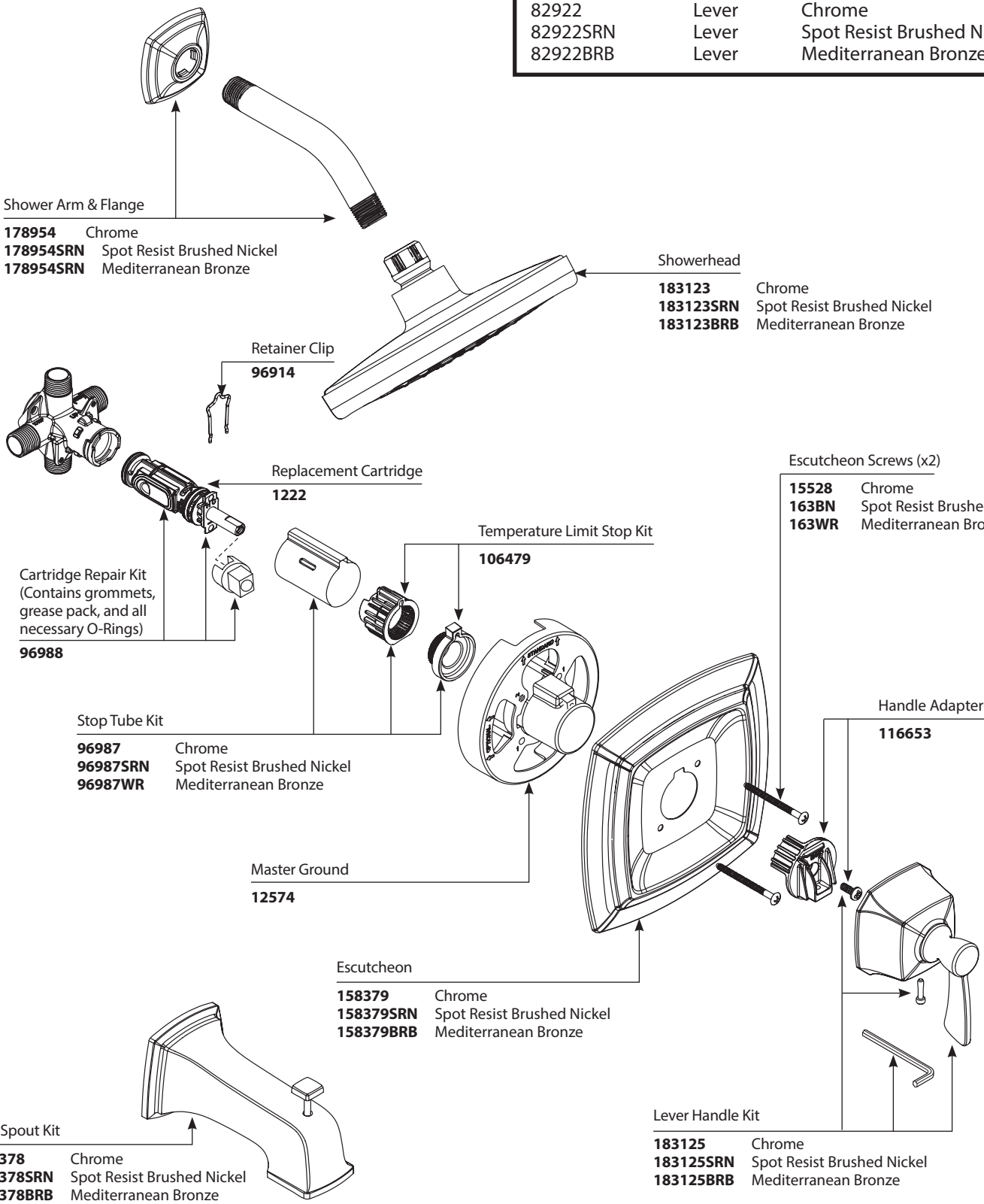

11/17KDT/K EXP/2013 900002536B6
Released/01