Parkview™ Technical Specification

24” Double Towel Bar DN8622

Stock Numbers:

q **DN8622WCH – 24” Double Towel Bar**
Chrome and White Finish

Dimensions:

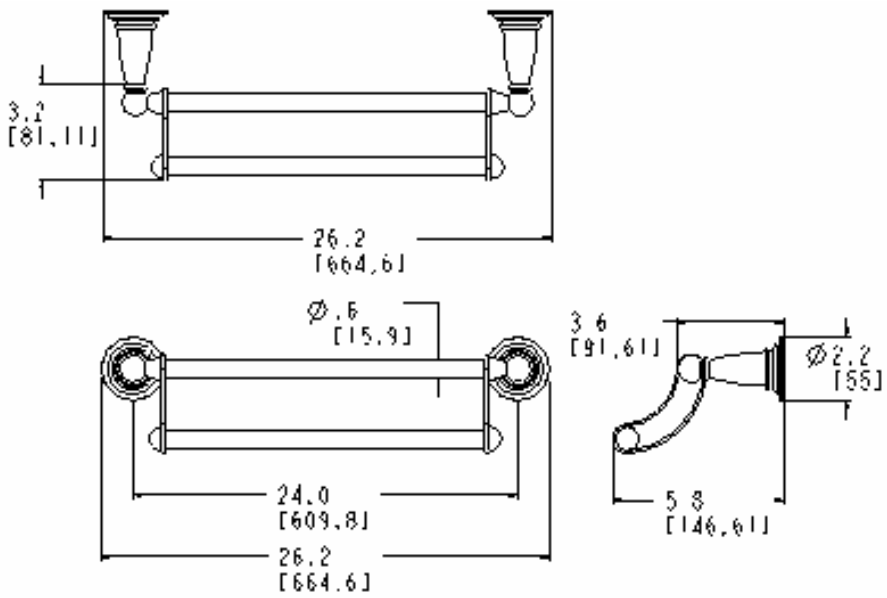

Materials:

Double towel bar posts are constructed of zinc. Bars are constructed of brass.

Installation Instructions:

1. Position the mounting template on the wall in the desired location.
2. Using a level, align the template and tape it to the wall.
3. Drill two 5/16” holes at each mounting post location that corresponds to your product.
4. Remove the template from the wall.
5. Fold ends of the plastic toggle together (see Figure 1) and insert into each hole in the wall.
6. Lightly tap anchors until flush with the wall.
7. One at a time, insert plastic pin into each of the anchors and lightly tap to activate anchor (see Figure 2). Remove pin and repeat on all anchors.
8. Remove mounting posts from the product assemblies by loosening each setscrew.
9. One at a time, place each mounting post over anchors (notch facing downward) and insert screws through post into anchors.
10. Tighten screws.
11. Place skirt over each mounting post.
12. Assemble the towel bar and posts.
13. While assembled, position each end post with setscrews facing down and place over both mounting posts. Tighten the setscrew at the bottom of each post.

Cleaning Instructions:

To preserve the fine finish of this product, clean only with a soft damp cloth. Dry well. Do not use commercial or abrasive cleaners.

Stock Number:_____Double Towel Bar
By Creative Specialties

25300 AL MOEN DRIVE • NORTH OLMSTED, OH 44070
CORPORATE HEADQUARTERS: (800) 321-8809 • FAX: (800) 848-6636
INTERNATIONAL: (440) 962-2000 • FAX: (440) 962-2726
CUSTOMER SERVICE (USA): 800-882-0116 • FAX: (888) 379-2720

©Copyright Creative Specialties International 2006
Literature #BA1321