Technical Specification

Shower Caddy DN1451SS

Stock Numbers:

- **DN1451SS – Shower Caddy**
  Stainless Steel Finish

Dimensions:

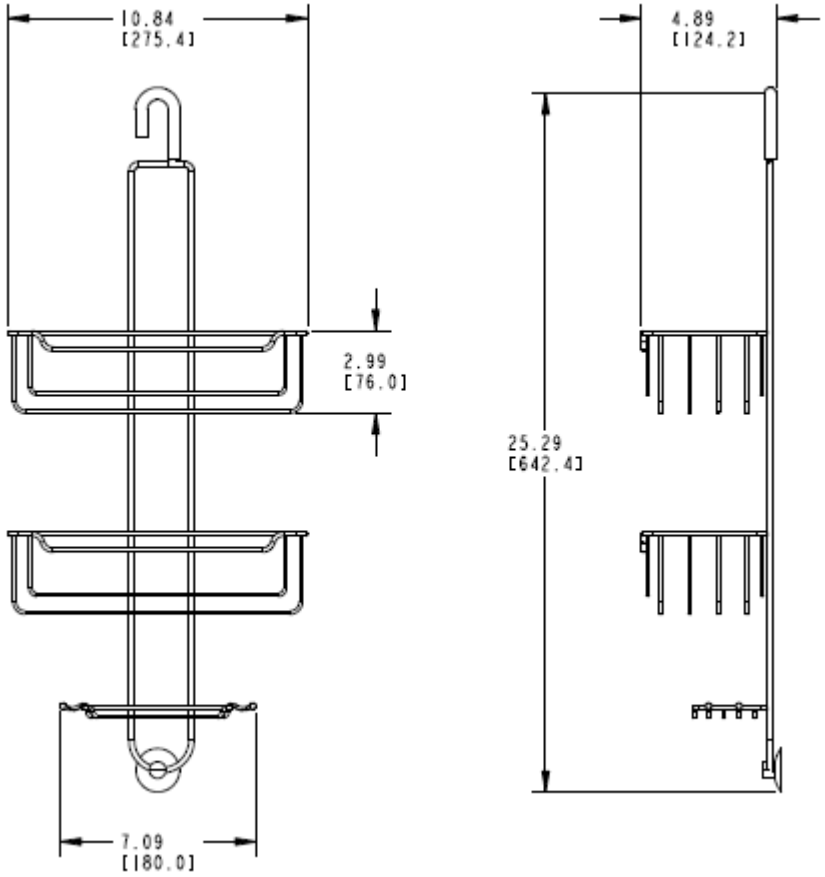

Materials:

Shower Caddy is constructed of 204 stainless steel.

Stock Number:_____Shower Caddy
By Creative Specialties

25300 AL MOEN DRIVE • NORTH OLMSTED, OH 44070
CORPORATE HEADQUARTERS: (800) 321-8809 • FAX: (800) 848-6636
INTERNATIONAL: (440) 962-2000 • FAX: (440) 962-2726
CUSTOMER SERVICE (USA): 800-882-0116 • FAX: (888) 379-2720
WWW.CSI.MOEN.COM

©Copyright Creative Specialties International