MOEN®
COMMERCIAL

Specifications

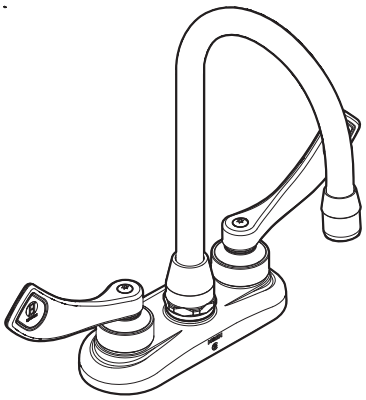

Two-Handle Bar/Pantry Faucet

Model: CA8279

BUY AMERICAN ACT COMPLIANT

NOTE: Designed to be installed through 2 holes - 1" min. dia.

DESCRIPTION
- Brass construction with chrome plated finish
- 1/2" IPS connections
- Vandal resistant torx head screws

OPERATION
- Wristblade handles with hot and cold color indicators
- Vandal resistant torx head screws

FLOW
- Vandal resistant torx flow aerator
- Aerator is limited to 2.2 GPM max (8.3L /min)
- Optional kit included with faucet - 2.0 gpm plain end laminar outlet with flow control device in spout

CARTRIDGE
- Brass shell, ceramic disc cartridge
- 1/4 turn operation

STANDARDS
- Third party certified to ASME A112.18.1M/CSA B-125 and all applicable requirements referenced therein including NSF 61/9
- Contains no more than 0.25% weighted average lead content
- Complies with California Proposition 65 and with the Federal Safe Water Drinking Act
- **ADA** for lever handles

WARRANTY
- Warranted for five years against material or manufacturing defects

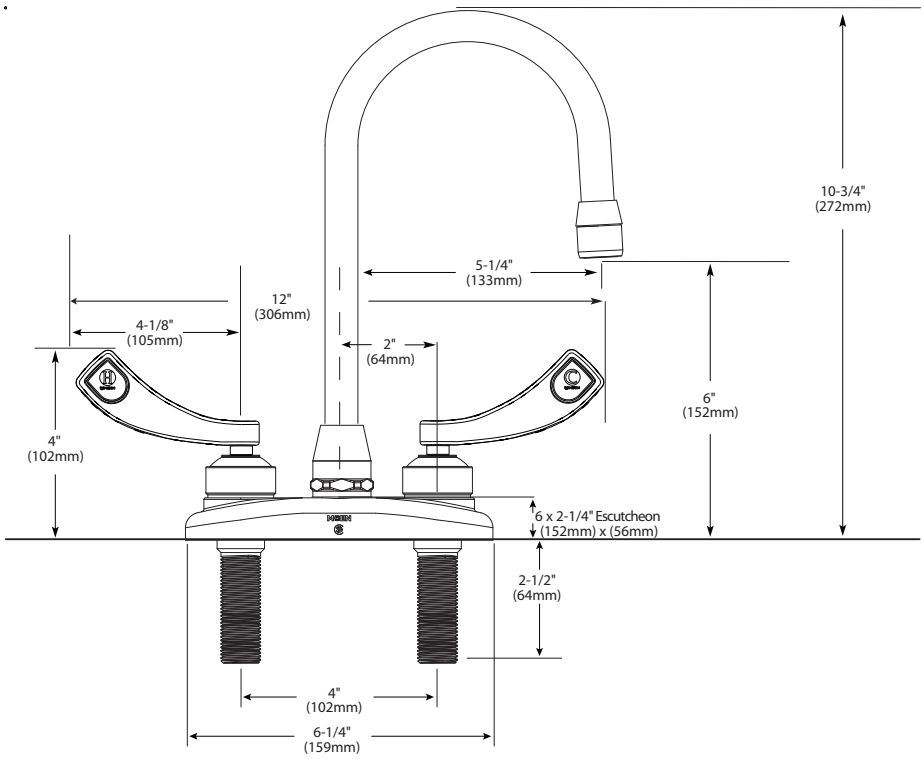

CRITICAL DIMENSIONS

(DO NOT SCALE)

03/13/2012 SPC11753 50000122216
Released 01