Specifications

FAUCET DESCRIPTION

- Metal construction with a chrome plated or decorative glacier finish
- 1/2" IPS connections will accept standard ball nose connection for 3/8" tubing

OPERATION

- Lever style handles
- Operate the faucet by rotating hot side handle in a counterclockwise manner to open, and clockwise to close and the cold side handle in a clockwise manner to open and counterclockwise to close

FLOW

- Aerator is limited to 2.2 gpm max (8.3 L/min)

CARTRIDGE

- 1224 cartridge design
- Nonmetallic and stainless steel material

STANDARDS

- Third party certified by CSA to meet CSA B-125, ASME A112.18.1M and all applicable requirements referenced therein and complies with the applicable requirements of ANSI A117.1
- Certified to ANSI/NSF 61/9
- Complies with California Proposition 65 and with the Federal Safe Water Drinking Act

WARRANTY

- Lifetime limited warranty against leaks, drips and finish defects to the original consumer purchaser
- 5 year warranty if used in commercial installations

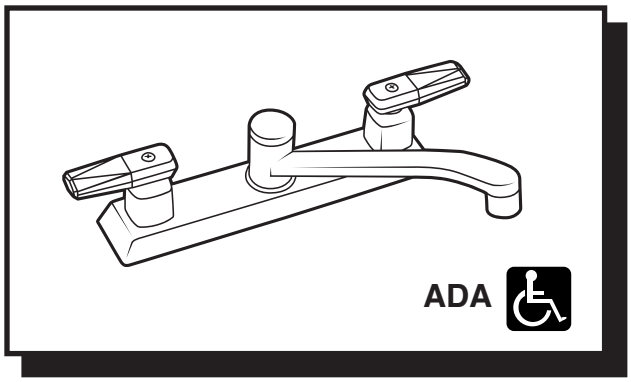

CHATEAU®
Two-Handle Lever Style Kitchen Faucet

Models: 7904, *7904W
***Discontinued 2/16/98**

NOTE: See reverse side for illustrated parts

NOTE: This faucet is designed to be installed through 3 holes 1" Min. Dia.

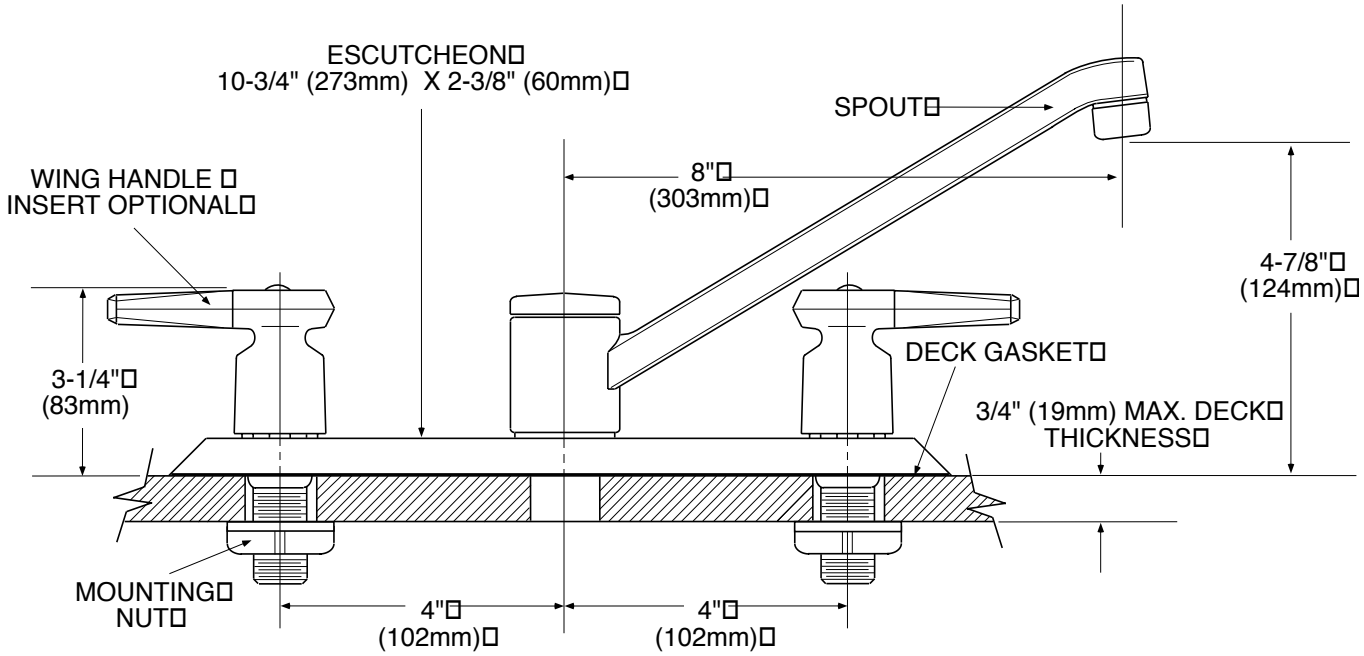

CRITICAL DIMENSIONS

(DO NOT SCALE)