Specifications

DESCRIPTION
- Chrome plated metal construction
- 1/2" IPS shanks
- Designed to be installed on 4" to 16" centers
- Includes metal pop-up type waste assembly

OPERATION
- Chrome knob style handles.
- Rotate either handle in a counterclockwise manner to open and clockwise to close

FLOW
- Aerator is limited to 2.2 gpm max (8.3 L/min)

CARTRIDGE
- 1224 cartridge design
- Nonmetallic and stainless steel material

STANDARDS
- Third party certified by CSA to meet CSA B-125, ASME A112.18.1M and all applicable requirements referenced therein
- Certified to ANSI/NSF 61/9
- Complies with California Proposition 65 and with the Federal Safe Water Drinking Act

WARRANTY
- Lifetime limited warranty against leaks, drips and finish defects to the original consumer purchaser
- 5 year warranty if used in commercial installations

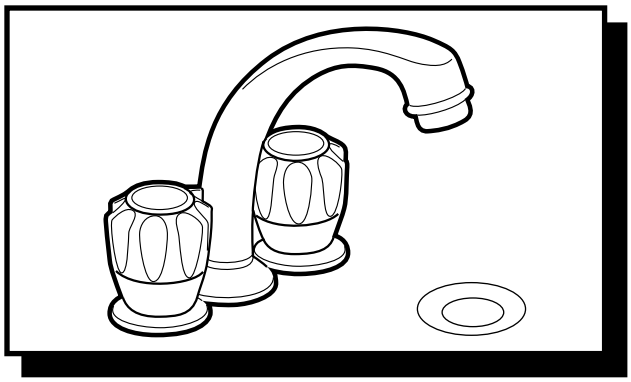

CHATEAU®
Two-Handle Widespread
Lavatory Faucet
With Metal Waste Assembly

Model: 4934

NOTE: See reverse side for illustrated parts and optional handle inserts

NOTE: SPOUT INSTALLS THROUGH 1" MIN. DIA. HOLE. VALVES INSTALL THROUGH 1-1/8" MIN. DIA. HOLE

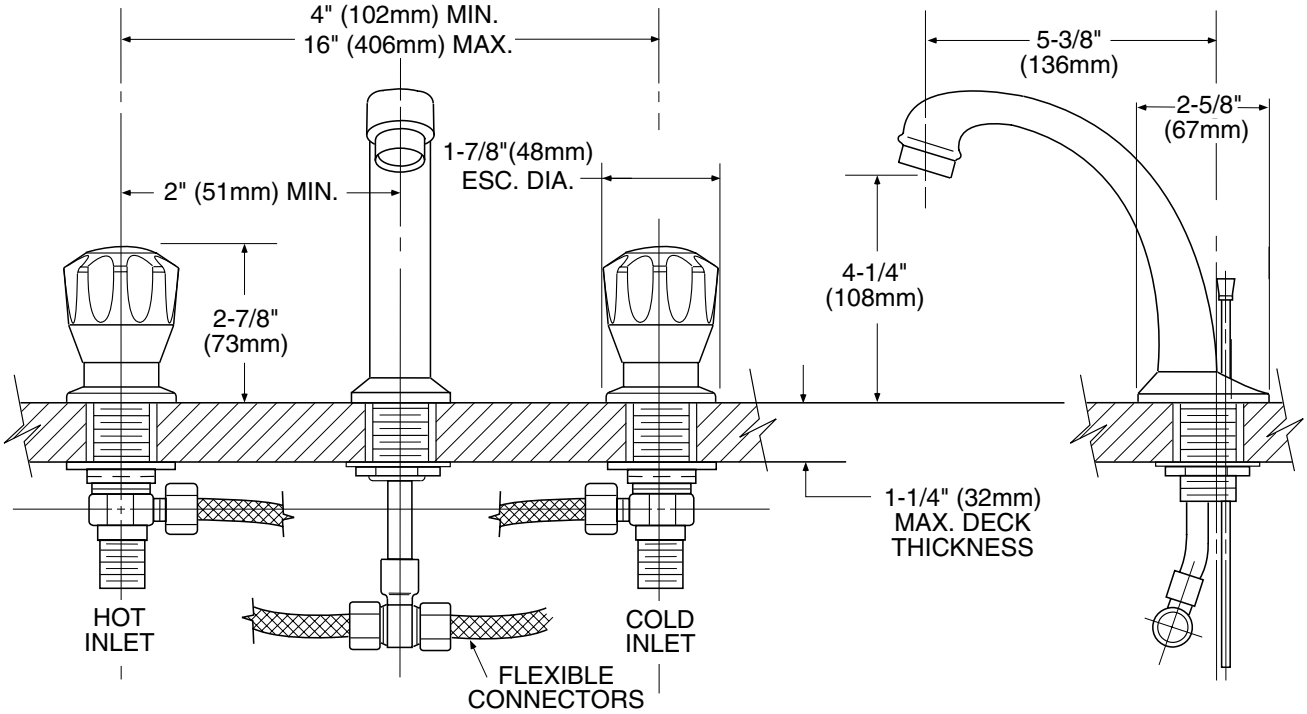

FRONT VIEW **SIDE VIEW**

CRITICAL DIMENSIONS

(DO NOT SCALE)